# MZ-80AFI CIRCUIT DIAGRAM AND PWB

Notes: The circuit diagram and printed wiring board are subject to change without prior notice.

■ MZ-80AFI Circuit

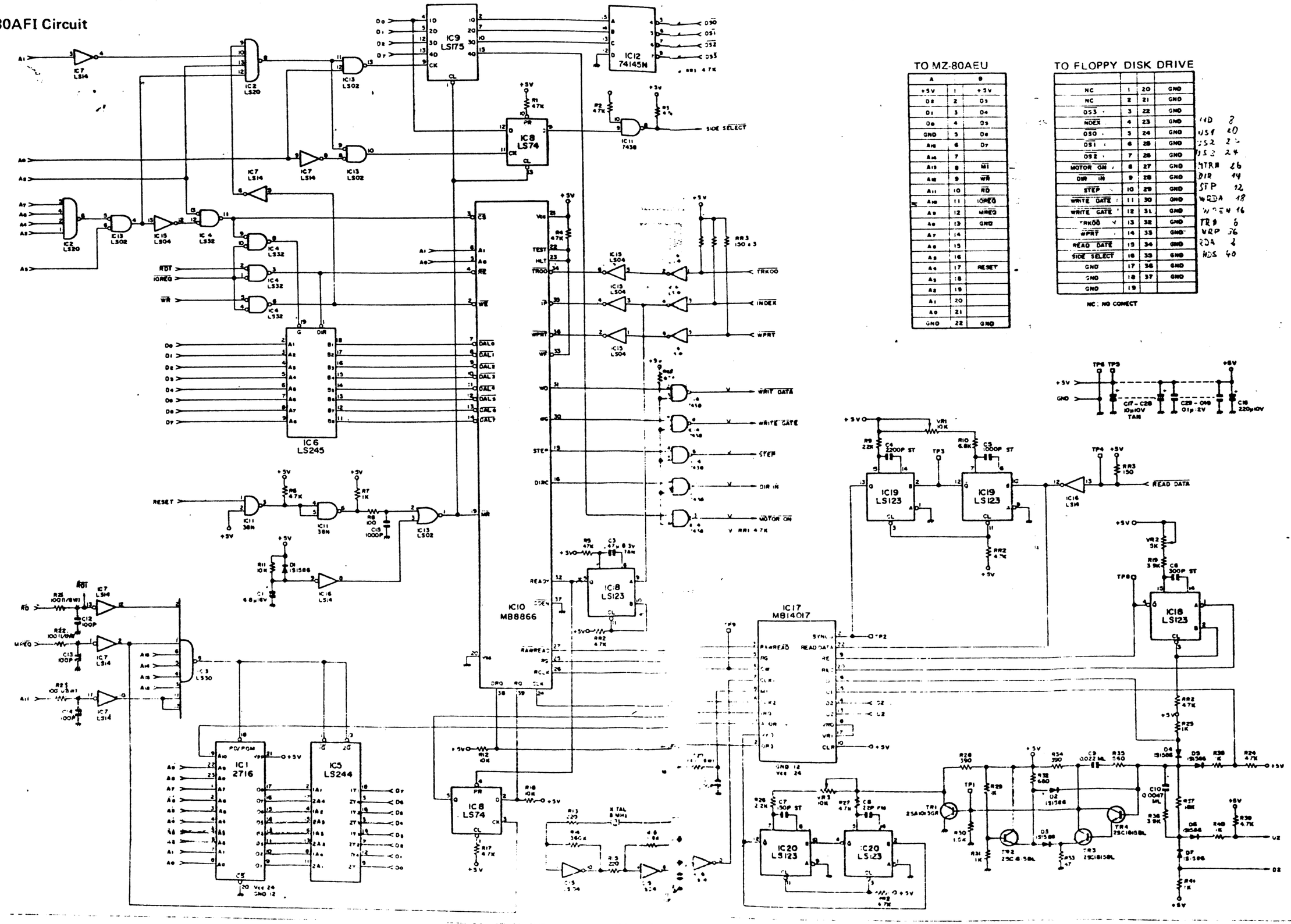


TO MZ-80AEU

| A | | B |
|---|---|---|
| +5V | 1 | +5V |
| D2 | 2 | D3 |
| D1 | 3 | D4 |
| D0 | 4 | D5 |
| GND | 5 | D6 |
| A10 | 6 | D7 |
| A14 | 7 | |
| A13 | 8 | M1 |
| A12 | 9 | WR |
| A11 | 10 | RD |
| A10 | 11 | IORQ |
| A9 | 12 | MREQ |
| A8 | 13 | GND |
| A7 | 14 | |
| A6 | 15 | |
| A5 | 16 | |
| A4 | 17 | RESET |
| A3 | 18 | |
| A2 | 19 | |
| A1 | 20 | |
| A0 | 21 | |
| GND | 22 | GND |

TO FLOPPY DISK DRIVE

| | | | | |
|---|---|---|---|---|
| NC | 1 | 20 | GND | HD 8 |
| NC | 2 | 21 | GND | US1 10 |
| $\overline{DS3}$ | 3 | 22 | GND | US2 12 |
| $\overline{INDEX}$ | 4 | 23 | GND | US3 14 |
| $\overline{DS0}$ | 5 | 24 | GND | MTRA 16 |
| $\overline{DS1}$ | 6 | 25 | GND | DIR 18 |
| $\overline{DS2}$ | 7 | 26 | GND | STP 20 |
| $\overline{MOTOR\ ON}$ | 8 | 27 | GND | WRDA 22 |
| $\overline{DIR\ IN}$ | 9 | 28 | GND | WREN 24 |
| $\overline{STEP}$ | 10 | 29 | GND | TR0 26 |
| $\overline{WRITE\ DATE}$ | 11 | 30 | GND | WRP 28 |
| $\overline{WRITE\ GATE}$ | 12 | 31 | GND | RDA 30 |
| $\overline{TRK00}$ | 13 | 32 | GND | HDS 32 |
| $\overline{WPRT}$ | 14 | 33 | GND | |
| $\overline{READ\ DATE}$ | 15 | 34 | GND | |
| $\overline{SIDE\ SELECT}$ | 16 | 35 | GND | |
| GND | 17 | 36 | GND | |
| GND | 18 | 37 | GND | |
| GND | 19 | | | |

NC : NO CONECT