X1 turbo 全回路図

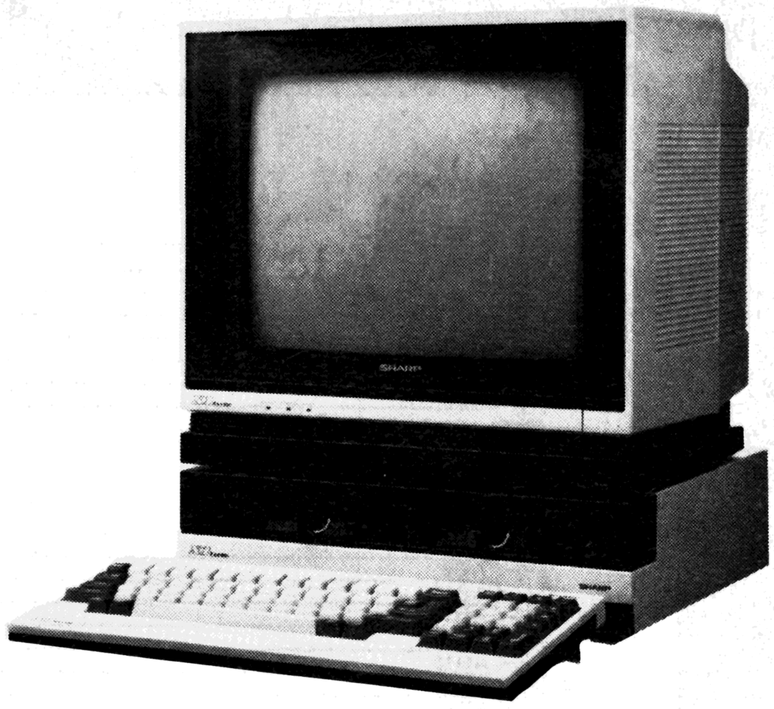

本資料は編集部の責任で参考用として掲載するものです．したがって，本資料に関してメーカーに直接問い合わせることはご遠慮ください．（編）

I/Oポート

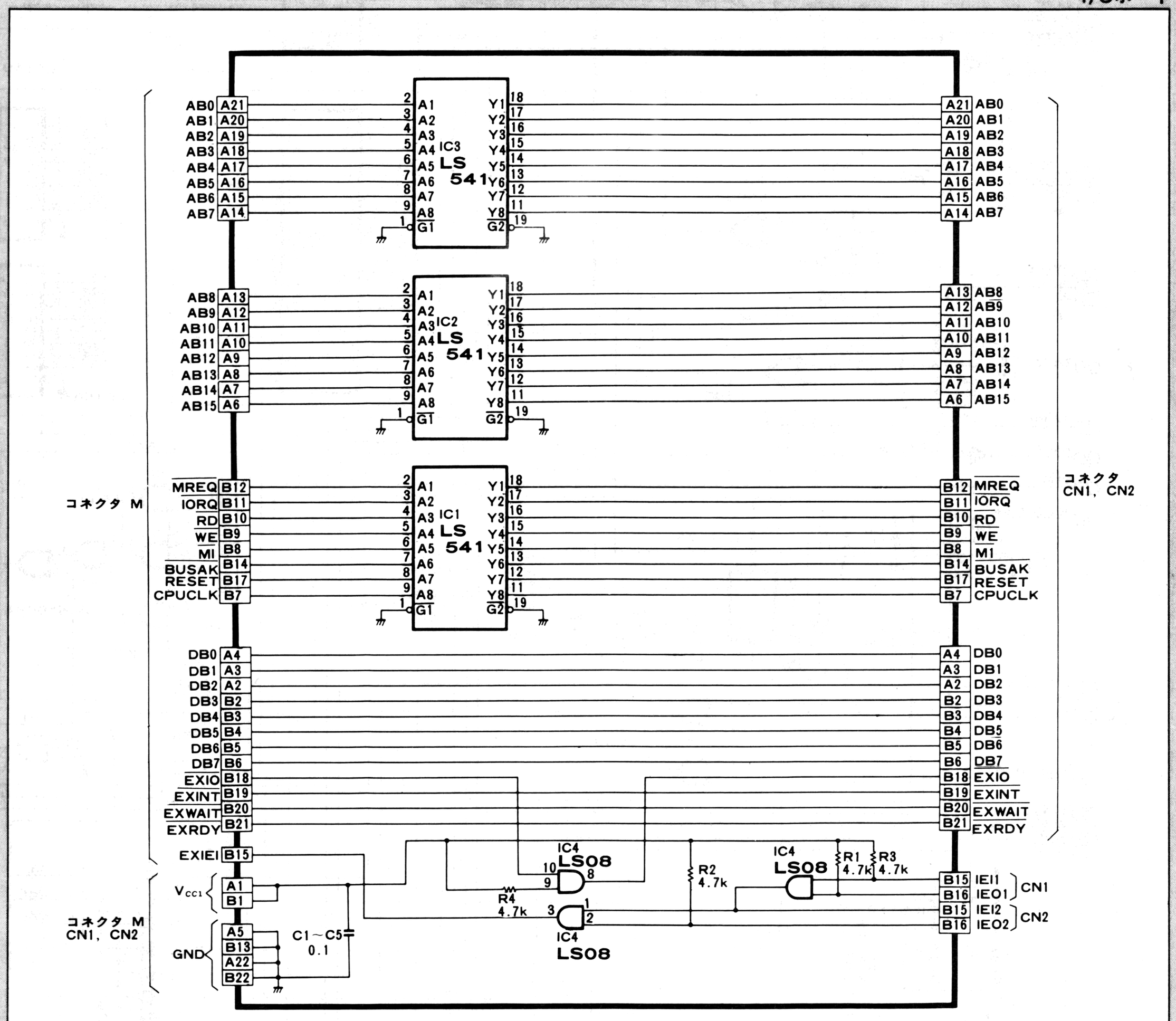

CZ850Cの場合

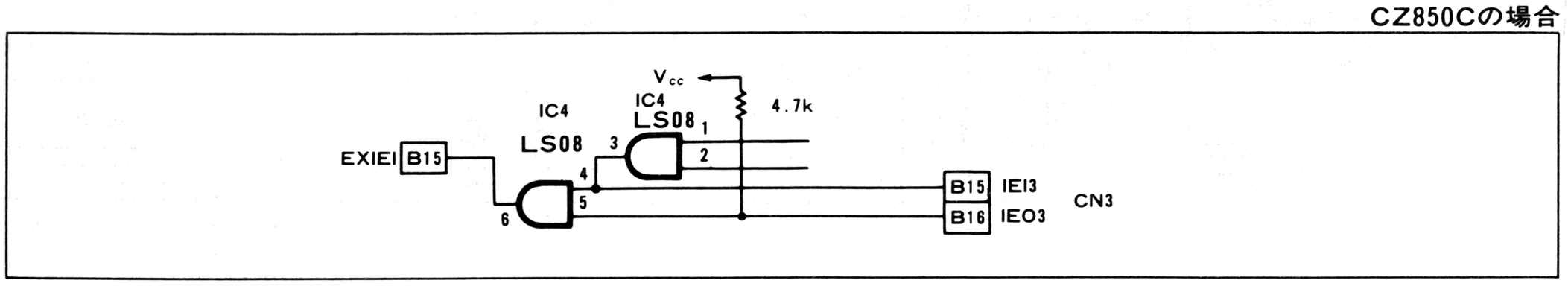

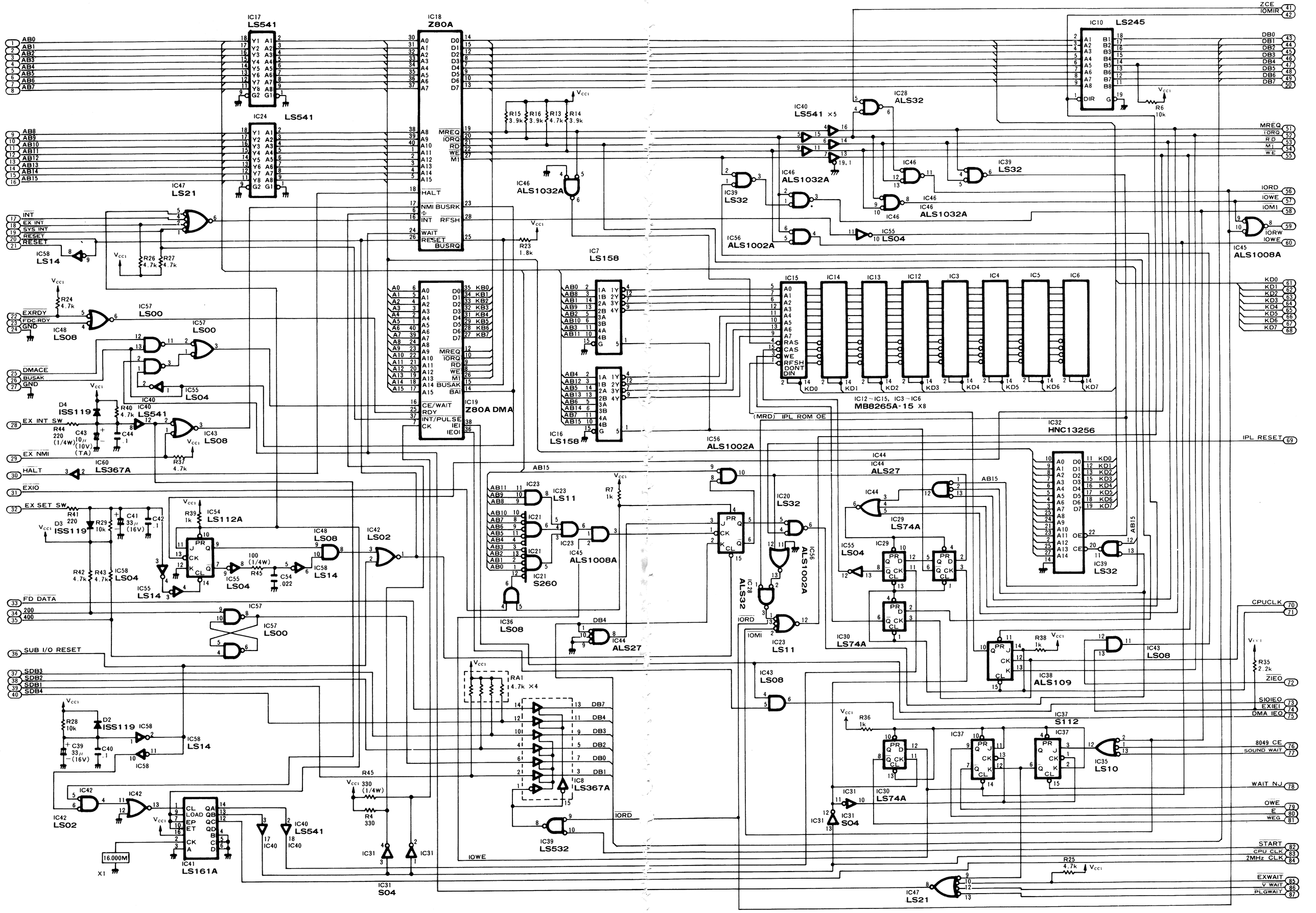
IC17 LS541
IC24 LS541
IC18 Z80A
IC10 LS245
IC47 LS21
IC58 LS14
IC57 LS00
IC48 LS08
IC55 LS04
IC40 LS541
IC43 LS08
IC60 LS367A
IC54 LS112A
IC42 LS02
IC41 LS161A
IC19 Z80A DMA
IC7 LS158
IC16 LS158
IC46 ALS1032A
IC40 LS541 ×5
IC28 ALS32
IC39 LS32
IC56 ALS1002A
IC45 ALS1008A
IC15 IC14 IC13 IC12 IC3 IC4 IC5 IC6
MB8265A-15 ×8
IC12~IC15, IC3~IC6
IC32 HNC13256
IC44 ALS27
IC29 LS74A
IC30 LS74A
IC38 ALS109
IC37 S112
IC35 LS10
IC31 S04
IC47 LS21
IC23 LS11
IC21 S260
IC36 LS08
IC8 LS367A
IC39 LS532
IC20 LS32
IC56 ALS1002A
IC28 ALS32
IC23 LS11
IC43 LS08
IC44 ALS27
IC55 LS04
IC30 LS74A
IC31 S04
IC58 LS14
IC57 LS00
IC42 LS02
IC41 LS161A
IC54 LS112A
IC48 LS08
IC58 LS04
IC55 LS14
IC58 LS14
IC58
IC42
IC42
IC40 LS541
IC31 S04
IC31
IC31
IC31

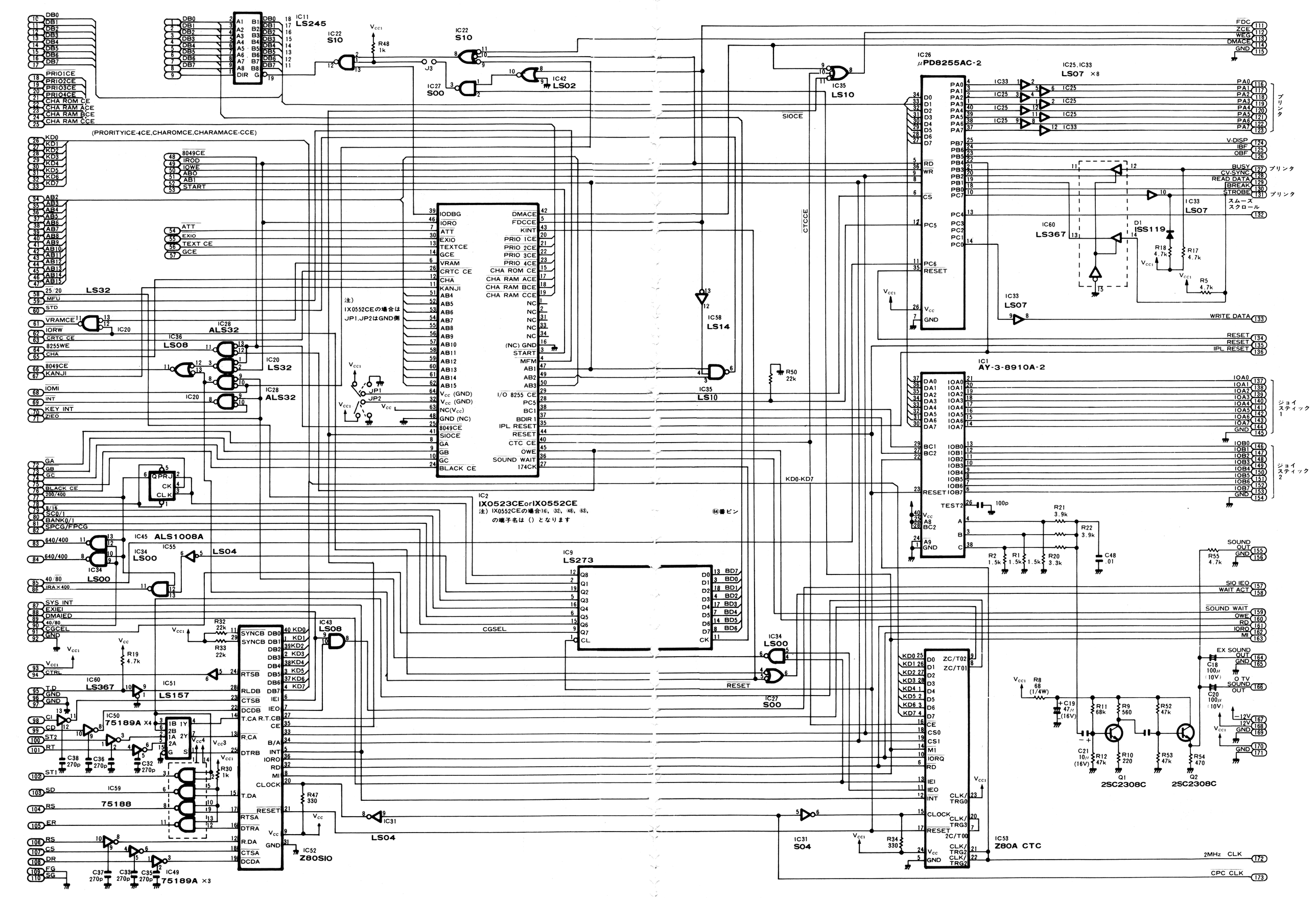
IC11 LS245
IC22 S10
IC27 S00
IC42 LS02
IC35 LS10
IC26 μPD8255AC-2
IC25,IC33 LS07 ×8
IC33 LS07
IC60 LS367
D1 1SS119
R18 4.7k
R17 4.7k
R5 4.7k
R48 1k
J3
SIOCE
CTCCE
KD0-KD7
(PRORITYICE-4CE,CHAROMCE,CHARAMACE-CCE)
LS32
IC20
IC28 ALS32
IC36 LS08
注)
IX0552CEの場合は
JP1,JP2はGND側
JP1
JP2
IC58 LS14
R50 22k
IC35 LS10
IC1 AY-3-8910A-2
IC2
IX0523CEorIX0552CE
注) IX0552CEの場合16, 32, 48, 63,
の端子名は () となります
64番ピン
IC9 LS273
CGSEL
RESET
IC34 LS00
IC27 S00
IC45 ALS1008A
IC34 LS00
IC55 LS04
IC43 LS08
IC51 LS157
IC60 LS367
IC50 75189A ×4
IC59 75188
IC49 75189A ×3
IC52 Z80SIO
IC31 LS04
IC31 S04
IC53 Z80A CTC
R32 22k
R33 22k
R19 4.7k
R30 1k
R47 330
R34 330
R21 3.9k
R22 3.9k
R2 1.5k
R1 1.5k
R20 3.3k
C48 .01
100p
R55 4.7k
C18 100μ (10V)
C20 100μ (10V)
R8 68 (1/4W)
C19 47μ (16V)
C21 10μ (16V)
R11 68k
R12 47k
R9 560
R10 220
R52 47k
R53 47k
R54 470
Q1 2SC2308C
Q2 2SC2308C
C38 270p
C36 270p
C32 270p
C37 270p
C33 270p
C35 270p
FDC
ZCE
WEC
DMACE
GND
プリンタ
V-DISP
IBF
OBF
BUSY
CV-SYNC
READ DATA
BREAK
STROBE
スムース
スクロール
WRITE DATA
RESET
IPL RESET
ジョイスティック1
ジョイスティック2
SOUND OUT
SIO IEO
WAIT ACT
SOUND WAIT
OWE
RD
IORQ
MI
EX SOUND
O TV SOUND
12V
2MHz CLK
CPC CLK

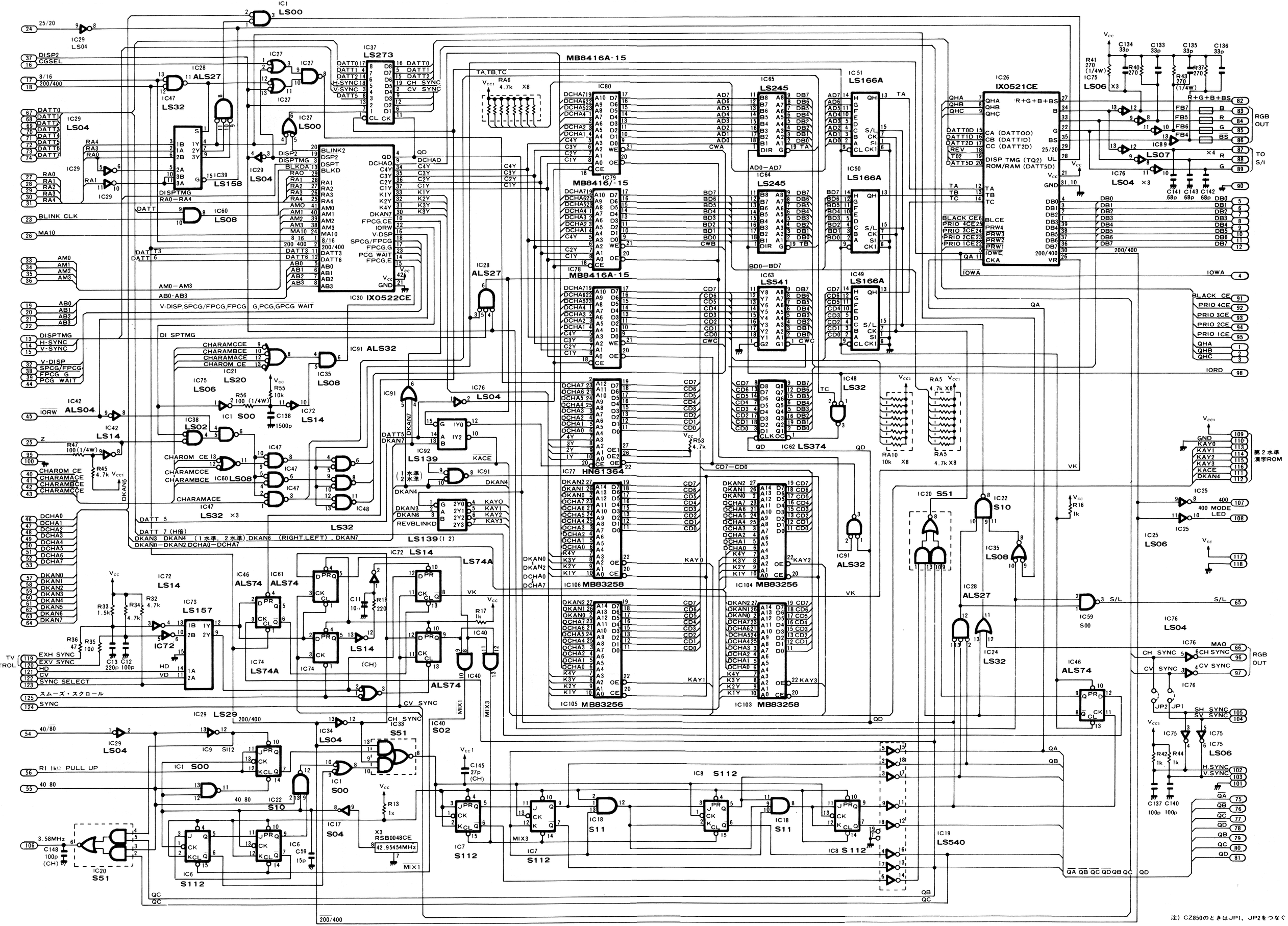
IC30 IX0522CE
IC26 IX0521CE
IC77 HN61364
IC106 MB83258
IC105 MB83256
IC104 MB83256
IC103 MB83258
IC80 MB8416A-15
IC79 MB8416/-15
IC78 MB8416A-15
IC37 LS273
IC62 LS374
IC73 LS157
IC92 LS139
IC91 ALS32
IC19 LS540
IC20 S51
IC22 S10
IC40 S02
IC8 S112
IC18 S11
IC7 S112
IC6 S112
IC59 S00
IC1 S00
IC17 S04
X3 RSB0048CE
42.95454MHz
RGB OUT
TO S/I
第2水準漢字ROM
RGB OUT
TV CONTROL
EXH SYNC
EXV SYNC
HD
CV
SYNC SELECT
スムーズ・スクロール
SYNC
R1 1kΩ PULL UP
3.58MHz
DISP2
CGSEL
8/16
200/400
BLINK CLK
MA10
AM0
AM1
AM2
AM3
AB0
AB1
AB2
AB3
DISPTMG
H-SYNC
V-SYNC
V-DISP
SPCG/FPCG
FPCG G
PCG WAIT
IORW
Z
CHAROM CE
CHARAMACE
CHARAMBCE
CHARAMCCE
DCHA0
DCHA1
DCHA2
DCHA3
DCHA4
DCHA5
DCHA6
DCHA7
DKAN0
DKAN1
DKAN2
DKAN3
DKAN4
DKAN5
DKAN6
DKAN7
40/80
40 80
DATT0
DATT1
DATT2
DATT3
DATT5
DATT6
H-SYNC
V-SYNC
CH SYNC
CV SYNC
SH SYNC
SV SYNC
H.SYNC
V.SYNC
MAO
400 MODE
LED
S/L
IOWA
IORD
BLACK CE
PRIO 4CE
PRIO 3CE
PRIO 2CE
PRIO 1CE
QHA
QHB
QHC
R+G+B+BS
FB7
FB5
FB6
FB4
DB0
DB1
DB2
DB3
DB4
DB5
DB6
DB7
AD0—AD7
BD0—BD7
CD7—CD0
KAY0
KAY1
KAY2
KAY3
KACE
REVBLINKD
(1水準 2水準)
(1水準. 2水準) DKAN6 (RIGHT.LEFT) . DKAN7
DKAN0—DKAN2.DCHA0—DCHA7
DATT 7 (H倍)
DATT 5
AM0—AM3
AB0-AB3
V-DISP,SPCG/FPCG,FPCG G,PCG,GPCG WAIT
DISPTMG
RA0—RA4
DISP TMG (TQ2) UL
ROM/RAM (DATT5D)
CA (DATTOO)
CB (DATTID)
CC (DATT2D)
DATT0D
DATTID
DATT2D
DATT5D
REV
T02
BLCE
PRW4
PRW3
PRW2
PRW1
IOWE
CKA
VR
GND
200/400
MIX1
MIX3
注) CZ850のときはJP1, JP2をつなぐ

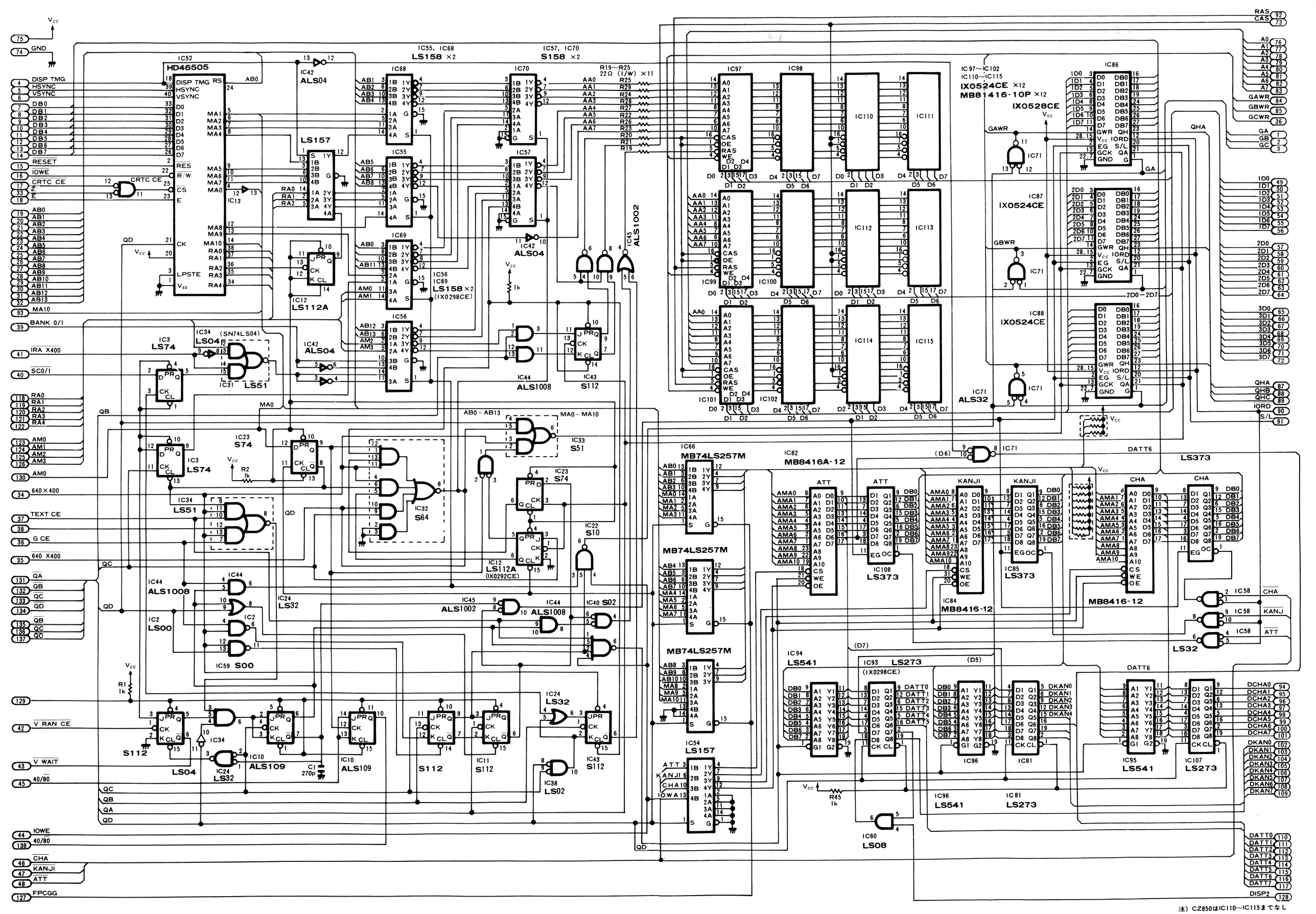

注）CZ850はIC110～IC115までなし

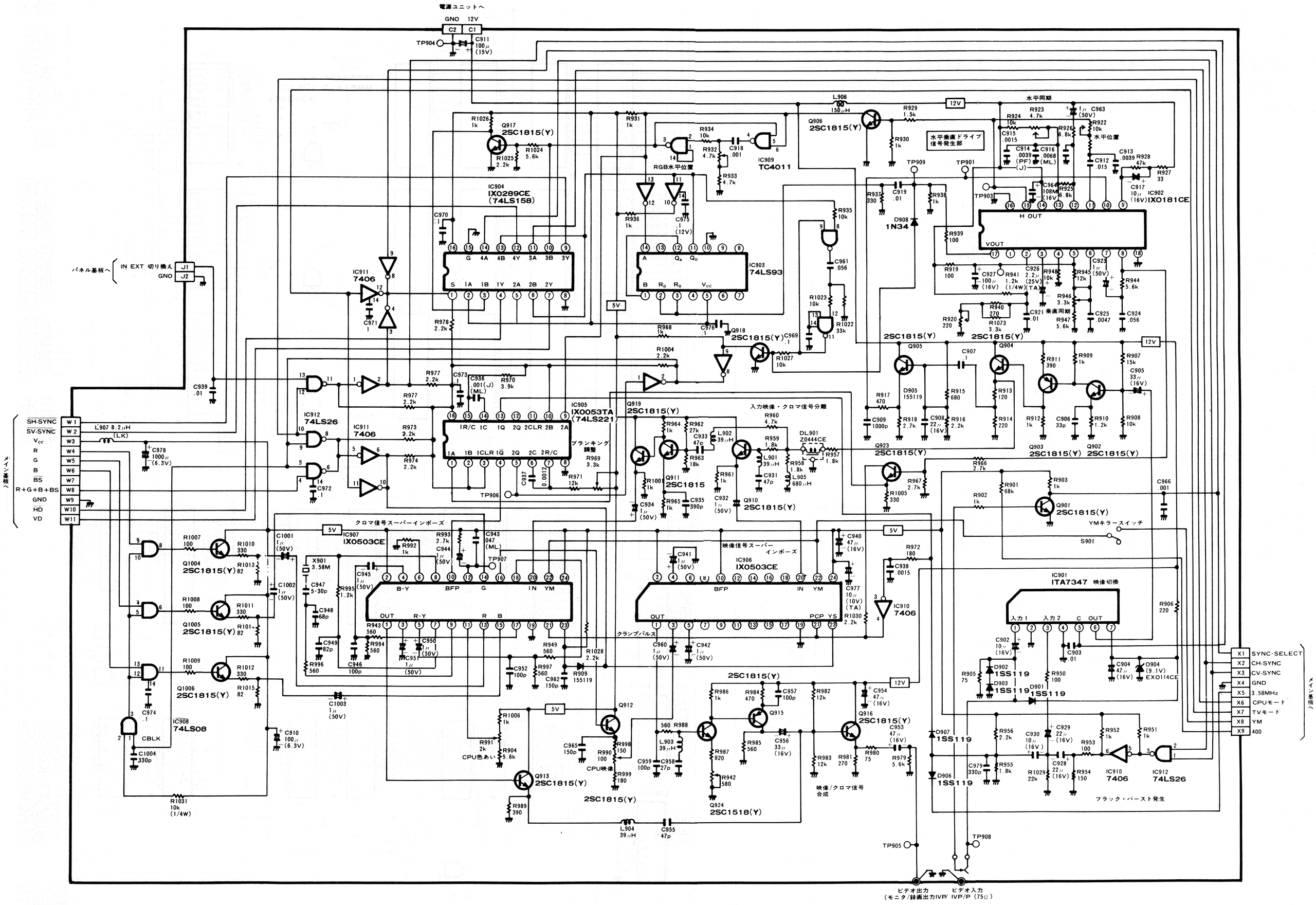
電源ユニットへ
GND 12V
C2 C1
TP904
C911 100μ (15V)
パネル基板へ
IN EXT 切り換え
J1
J2
メイン基板へ
SH-SYNC
SV-SYNC
Vcc
R
G
B
BS
R+G+B+BS
GND
HD
VD
W1 W2 W3 W4 W5 W6 W7 W8 W9 W10 W11
L907 8.2μH (LK)
C978 1000μ (6.3V)
IC911 7406
IC912 74LS26
IC904 IX0289CE (74LS158)
IC903 74LS93
IC905 IX0053TA (74LS221)
IC907 IX0503CE
IC906 IX0503CE
IC901 ITA7347 映像切換
IC902 IX0181CE
IC908 74LS08
IC910 7406
IC912 74LS26
Q917 2SC1815(Y)
Q906 2SC1815(Y)
IC909 TC4011
RGB水平位置
水平垂直ドライブ信号発生部
水平同期
水平位置
垂直同期
H OUT
VOUT
D908 1N34
入力映像・クロマ信号分離
ブランキング調整
DL901 Z0444CE
クロマ信号スーパーインポーズ
映像信号スーパーインポーズ
クランプパルス
CPU色あい
CPU映像
YMキラースイッチ
S901
CBLK
映像/クロマ信号合成
ブラック・バースト発生
SYNC-SELECT
CH-SYNC
CV-SYNC
GND
3.58MHz
CPUモード
TVモード
YM
400
TP905
TP908
ビデオ出力 (モニタ/録画出力IVP/
ビデオ入力 IVP/P (75Ω)

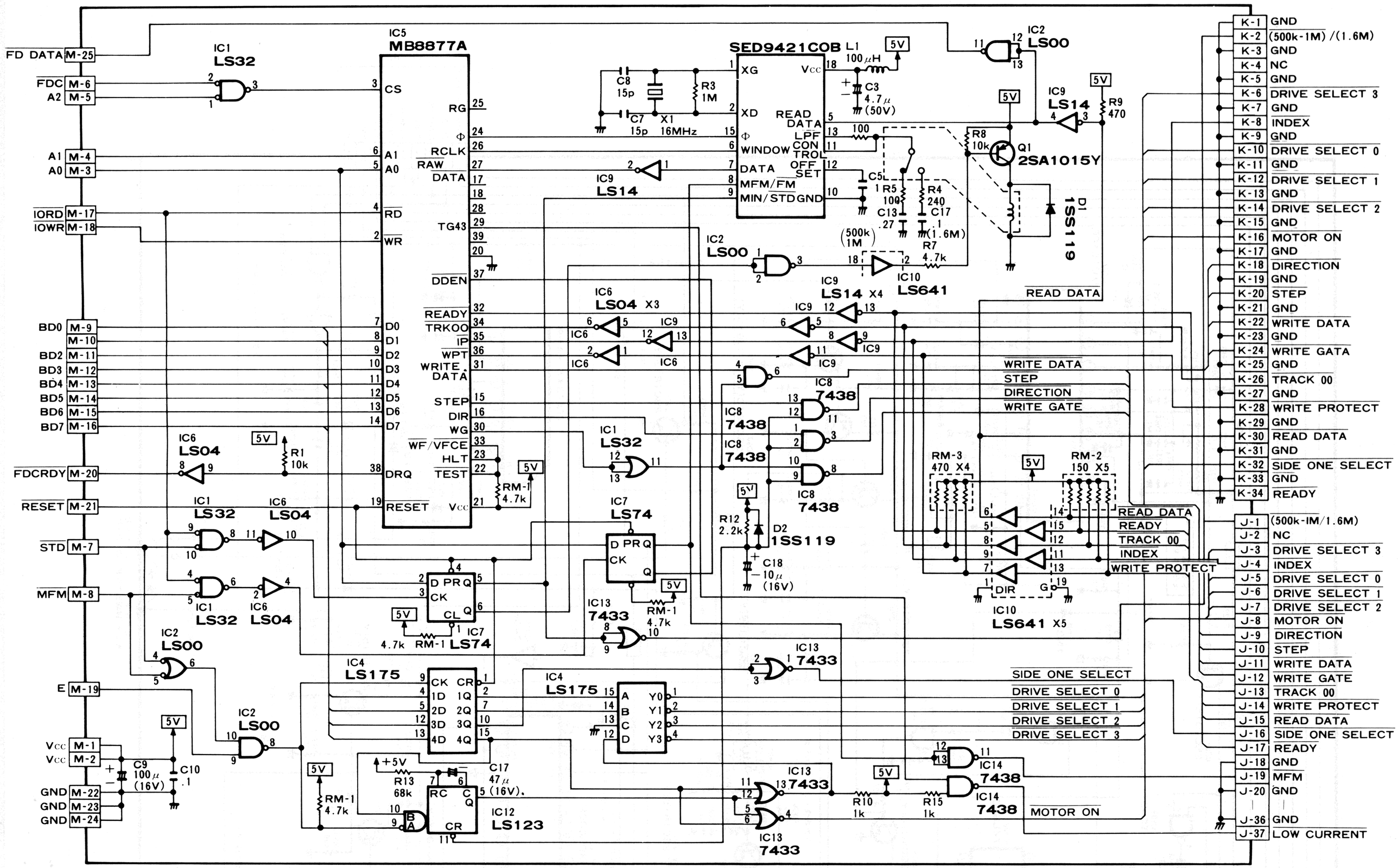
IC5
MB8877A
IC1
LS32
IC2
LS00
IC6
LS04
IC9
LS14
IC7
LS74
IC4
LS175
IC12
LS123
IC13
7433
IC8
7438
IC14
7438
IC10
LS641
SED9421COB
Q1
2SA1015Y
D1
1SS119
D2
1SS119
X1
16MHz
L1
100μH
C3
4.7μ
(50V)
C8
15p
C7
15p
R3
1M
R8
10k
R9
470
R5
100
R4
240
C13
.27
C17
.1
(1.6M)
R7
4.7k
(500k
1M)
R1
10k
RM-1
4.7k
RM-2
150 X5
RM-3
470 X4
R12
2.2k
C18
10μ
(16V)
C9
100μ
(16V)
C10
.1
C17
47μ
(16V)
R13
68k
R10
1k
R15
1k
FD DATA M-25
FDC M-6
A2 M-5
A1 M-4
A0 M-3
IORD M-17
IOWR M-18
BD0 M-9
M-10
BD2 M-11
BD3 M-12
BD4 M-13
BD5 M-14
BD6 M-15
BD7 M-16
FDCRDY M-20
RESET M-21
STD M-7
MFM M-8
E M-19
Vcc M-1
Vcc M-2
GND M-22
GND M-23
GND M-24
K-1 GND
K-2 (500k-1M) /(1.6M)
K-3 GND
K-4 NC
K-5 GND
K-6 DRIVE SELECT 3
K-7 GND
K-8 INDEX
K-9 GND
K-10 DRIVE SELECT 0
K-11 GND
K-12 DRIVE SELECT 1
K-13 GND
K-14 DRIVE SELECT 2
K-15 GND
K-16 MOTOR ON
K-17 GND
K-18 DIRECTION
K-19 GND
K-20 STEP
K-21 GND
K-22 WRITE DATA
K-23 GND
K-24 WRITE GATA
K-25 GND
K-26 TRACK 00
K-27 GND
K-28 WRITE PROTECT
K-29 GND
K-30 READ DATA
K-31 GND
K-32 SIDE ONE SELECT
K-33 GND
K-34 READY
J-1 (500k-IM/1.6M)
J-2 NC
J-3 DRIVE SELECT 3
J-4 INDEX
J-5 DRIVE SELECT 0
J-6 DRIVE SELECT 1
J-7 DRIVE SELECT 2
J-8 MOTOR ON
J-9 DIRECTION
J-10 STEP
J-11 WRITE DATA
J-12 WRITE GATE
J-13 TRACK 00
J-14 WRITE PROTECT
J-15 READ DATA
J-16 SIDE ONE SELECT
J-17 READY
J-18 GND
J-19 MFM
J-20 GND
J-36 GND
J-37 LOW CURRENT
READ DATA
WRITE DATA
STEP
DIRECTION
WRITE GATE
READ DATA
READY
TRACK 00
INDEX
WRITE PROTECT
SIDE ONE SELECT
DRIVE SELECT 0
DRIVE SELECT 1
DRIVE SELECT 2
DRIVE SELECT 3
MOTOR ON

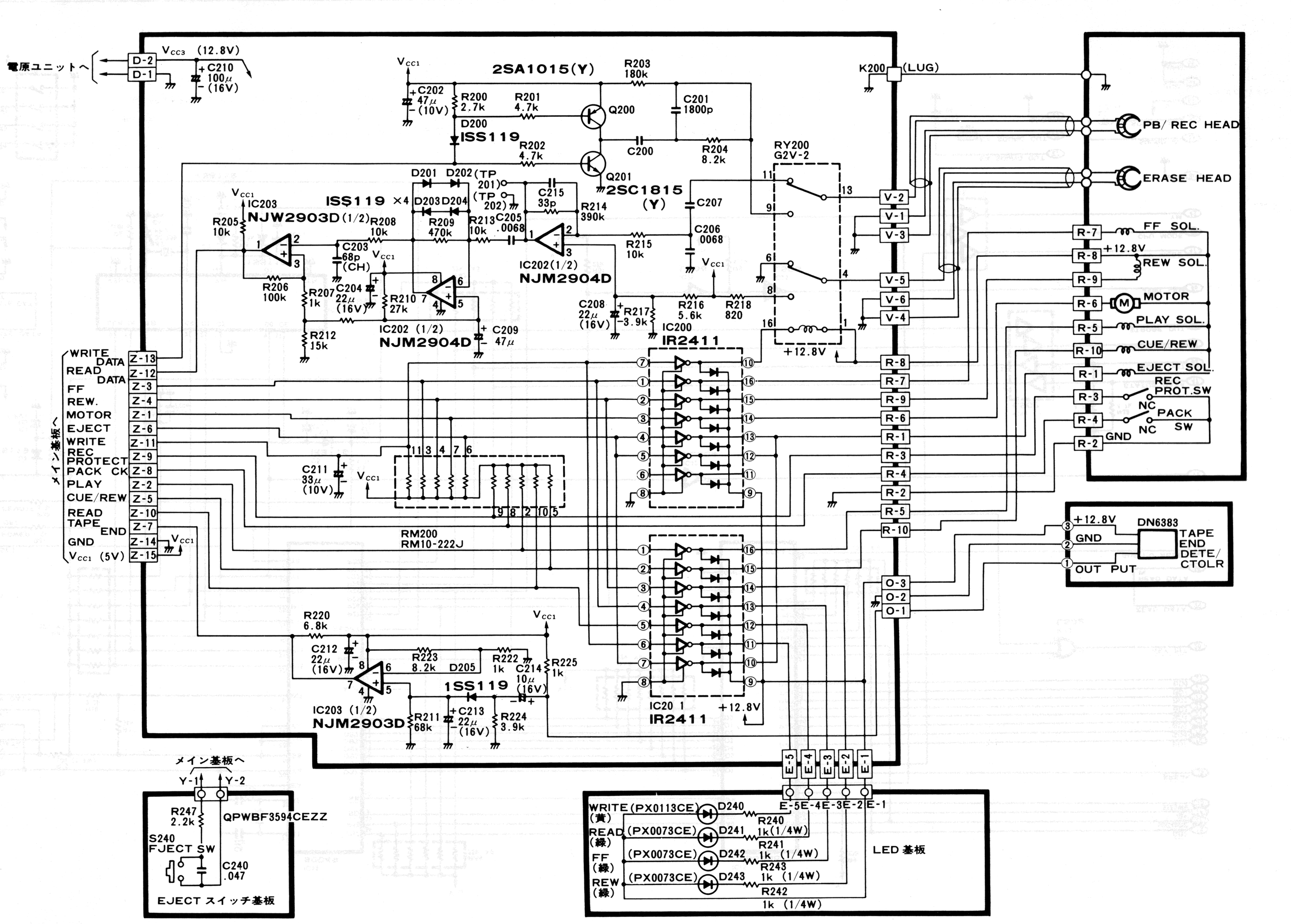
電源ユニットへ
D-2
D-1
Vcc3 (12.8V)
C210 100μ (16V)
Vcc1
C202 47μ (10V)
R200 2.7k
R201 4.7k
2SA1015(Y)
R203 180k
C201 1800p
Q200
D200
1SS119
R202 4.7k
C200
R204 8.2k
Q201
2SC1815 (Y)
RY200 G2V-2
K200
(LUG)
PB/ REC HEAD
ERASE HEAD
D201 D202
(TP 201)
(TP 202)
C215 33p
R214 390k
C207
C206 0068
R215 10k
IC203
NJW2903D(1/2)
R205 10k
R208 10k
1SS119 ×4
D203 D204
R209 470k
R213 10k
C205 .0068
C203 68p (CH)
R206 100k
R207 1k
C204 22μ (16V)
R210 27k
R212 15k
IC202 (1/2)
NJM2904D
C209 47μ
C208 22μ (16V)
R217 3.9k
R216 5.6k
R218 820
IC200
IR2411
+12.8V
V-2
V-1
V-3
V-5
V-6
V-4
R-7
R-8
R-9
R-6
R-5
R-10
R-1
R-3
R-4
R-2
FF SOL.
+12.8V
REW SOL.
MOTOR
PLAY SOL.
CUE/REW
EJECT SOL.
REC PROT.SW
NC
PACK SW
NC
GND
メイン基板へ
WRITE DATA Z-13
READ DATA Z-12
FF Z-3
REW. Z-4
MOTOR Z-1
EJECT Z-6
WRITE Z-11
REC PROTECT Z-9
PACK CK Z-8
PLAY Z-2
CUE/REW Z-5
READ TAPE END Z-7
GND Z-14
Vcc1 (5V) Z-15
C211 33μ (10V)
RM200
RM10-222J
+12.8V
GND
OUT PUT
DN6383
TAPE END DETE/ CTOLR
O-3
O-2
O-1
R220 6.8k
C212 22μ (16V)
R223 8.2k
D205
R222 1k
C214 10μ (16V)
R225 1k
1SS119
IC203 (1/2)
NJM2903D
R211 68k
C213 22μ (16V)
R224 3.9k
IC20 1
IR2411
+12.8V
E-5
E-4
E-3
E-2
E-1
メイン基板へ
Y-1
Y-2
R247 2.2k
QPWBF3594CEZZ
S240 FJECT SW
C240 .047
EJECT スイッチ基板
WRITE (PX0113CE) (黄)
D240
R240 1k(1/4W)
READ (PX0073CE) (緑)
D241
R241 1k (1/4W)
FF (PX0073CE) (緑)
D242
R243 1k (1/4W)
REW (PX0073CE) (緑)
D243
R242 1k (1/4W)
LED 基板

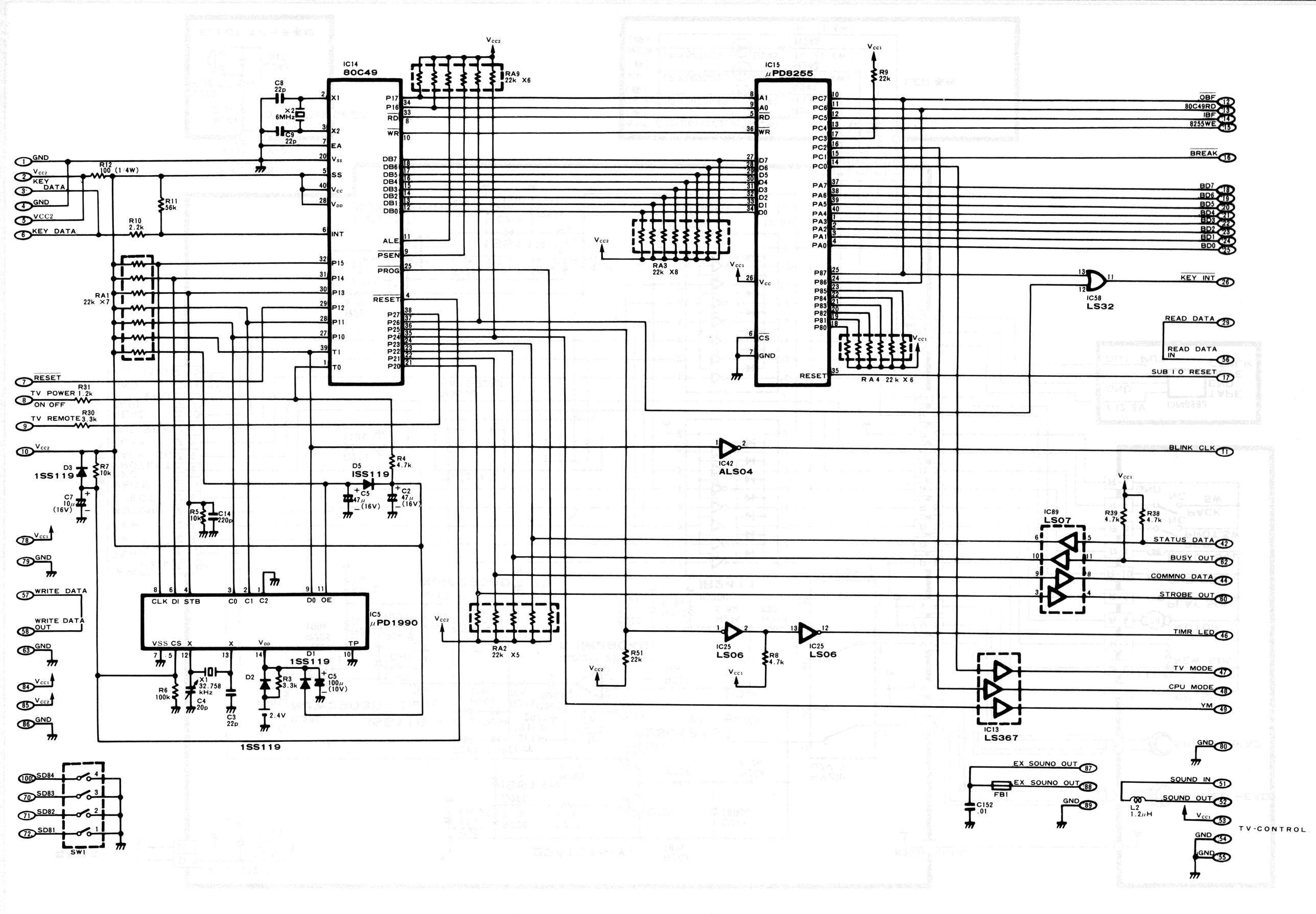
IC14
80C49
IC15
μPD8255
IC5
μPD1990
IC58
LS32
IC42
ALS04
IC89
LS07
IC25
LS06
IC13
LS367
SW1
X2
6MHz
C8
22p
C9
22p
R12
100 (1/4W)
R11
56k
R10
2.2k
RA1
22k X7
RA9
22k X6
RA3
22k X8
RA4 22k X6
RA2
22k X5
R9
22k
R31
1.2k
R30
3.3k
D3
1SS119
R7
10k
C7
10μ
(16V)
R5
10k
C14
220p
D5
1SS119
R4
4.7k
C5
47μ
(16V)
C2
47μ
(16V)
X1
32.758
kHz
C4
20p
C3
22p
R6
100k
D2
R3
3.3k
C5
100μ
(10V)
2.4V
R51
22k
R8
4.7k
R39
4.7k
R38
4.7k
FB1
C152
.01
L2
1.2μH
GND
KEY DATA
VCC2
RESET
TV POWER ON OFF
TV REMOTE
WRITE DATA
WRITE DATA OUT
SD84
SD83
SD82
SD81
OBF
80C49RD
IBF
8255WE
BREAK
BD7
BD6
BD5
BD4
BD3
BD2
BD1
BD0
KEY INT
READ DATA
READ DATA IN
SUB I O RESET
BLINK CLK
STATUS DATA
BUSY OUT
COMMNO DATA
STROBE OUT
TIMR LED
TV MODE
CPU MODE
YM
EX SOUND OUT
SOUND IN
SOUND OUT
TV-CONTROL

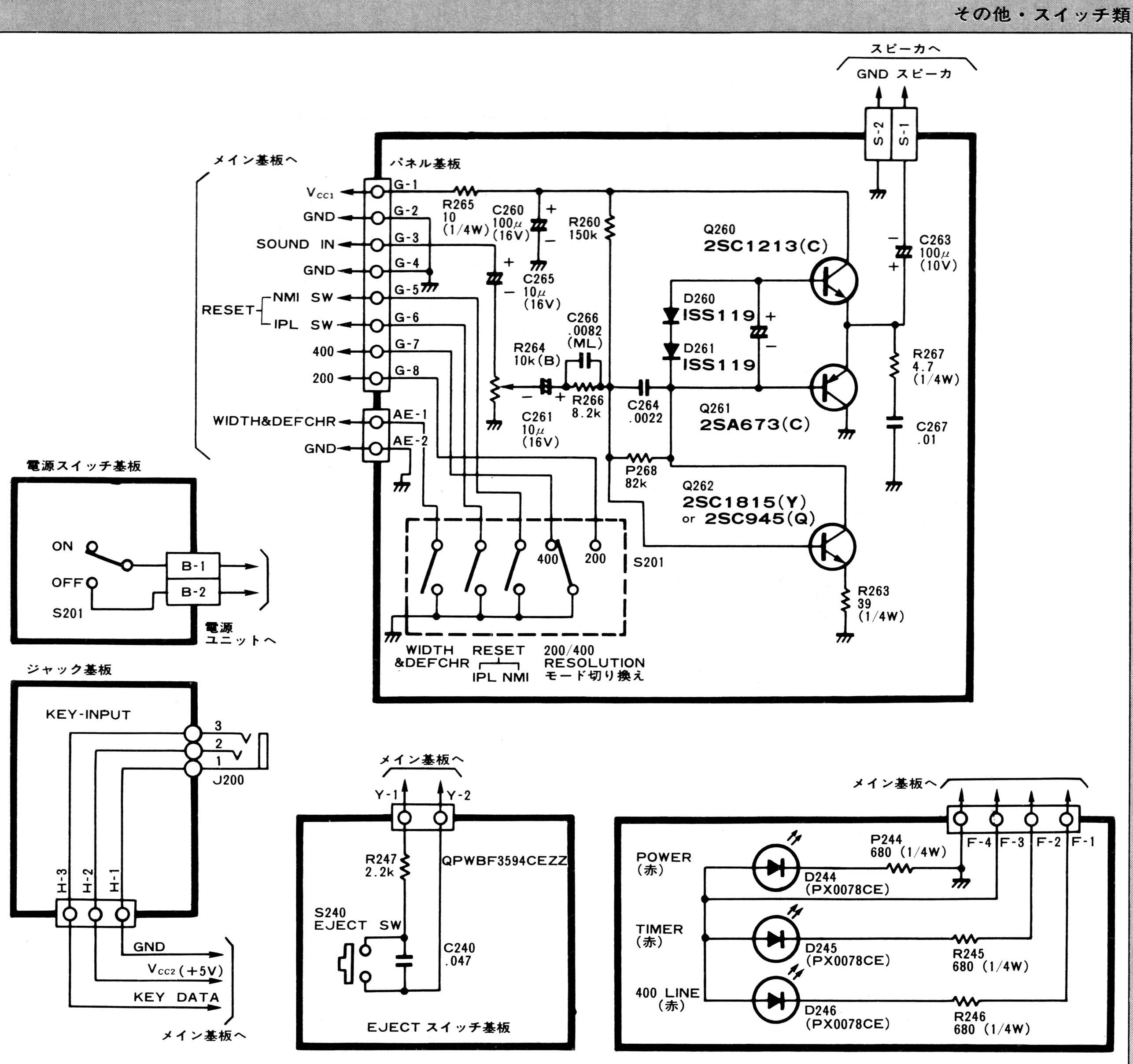

キーボード・インターフェイスCZ850の場合

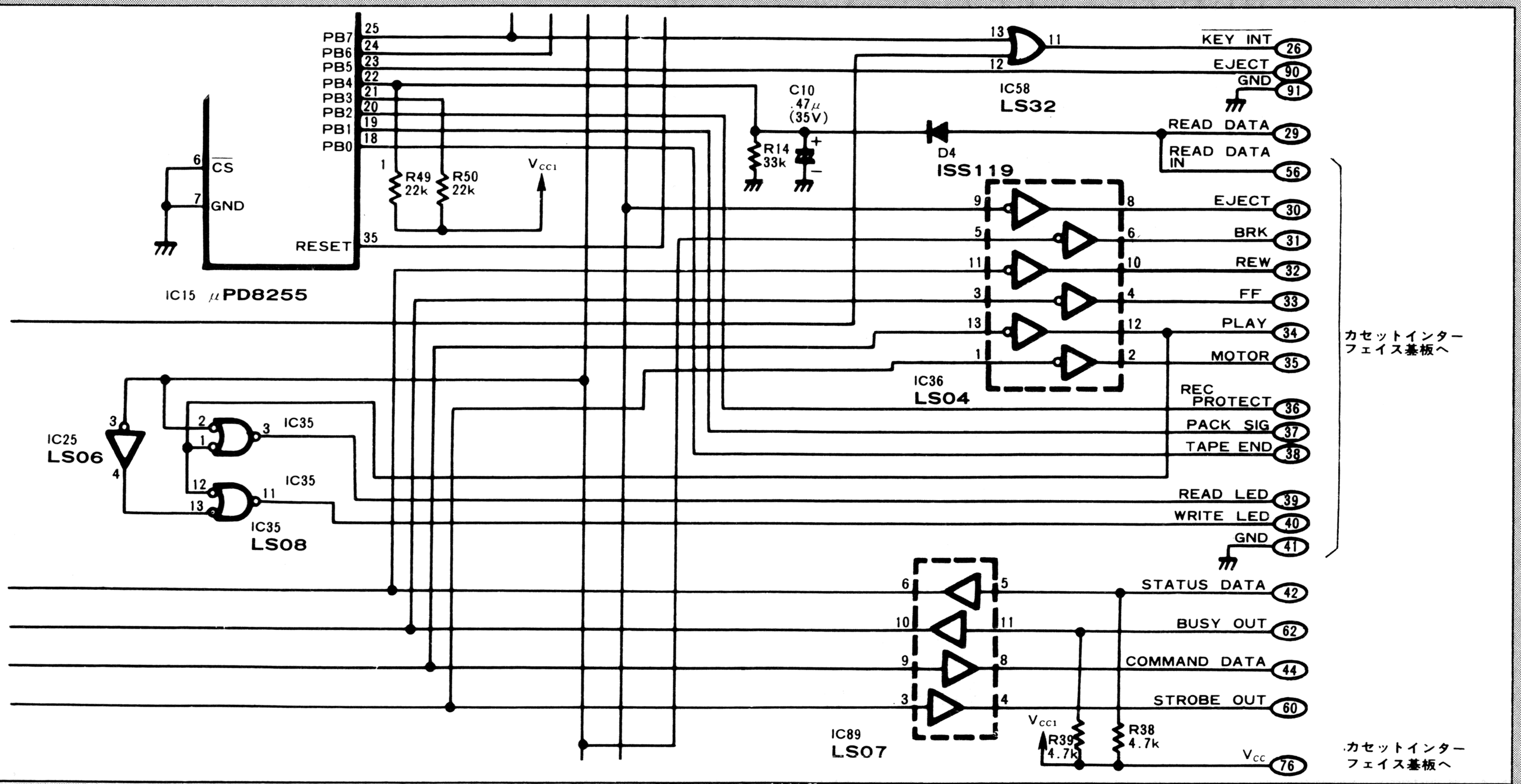

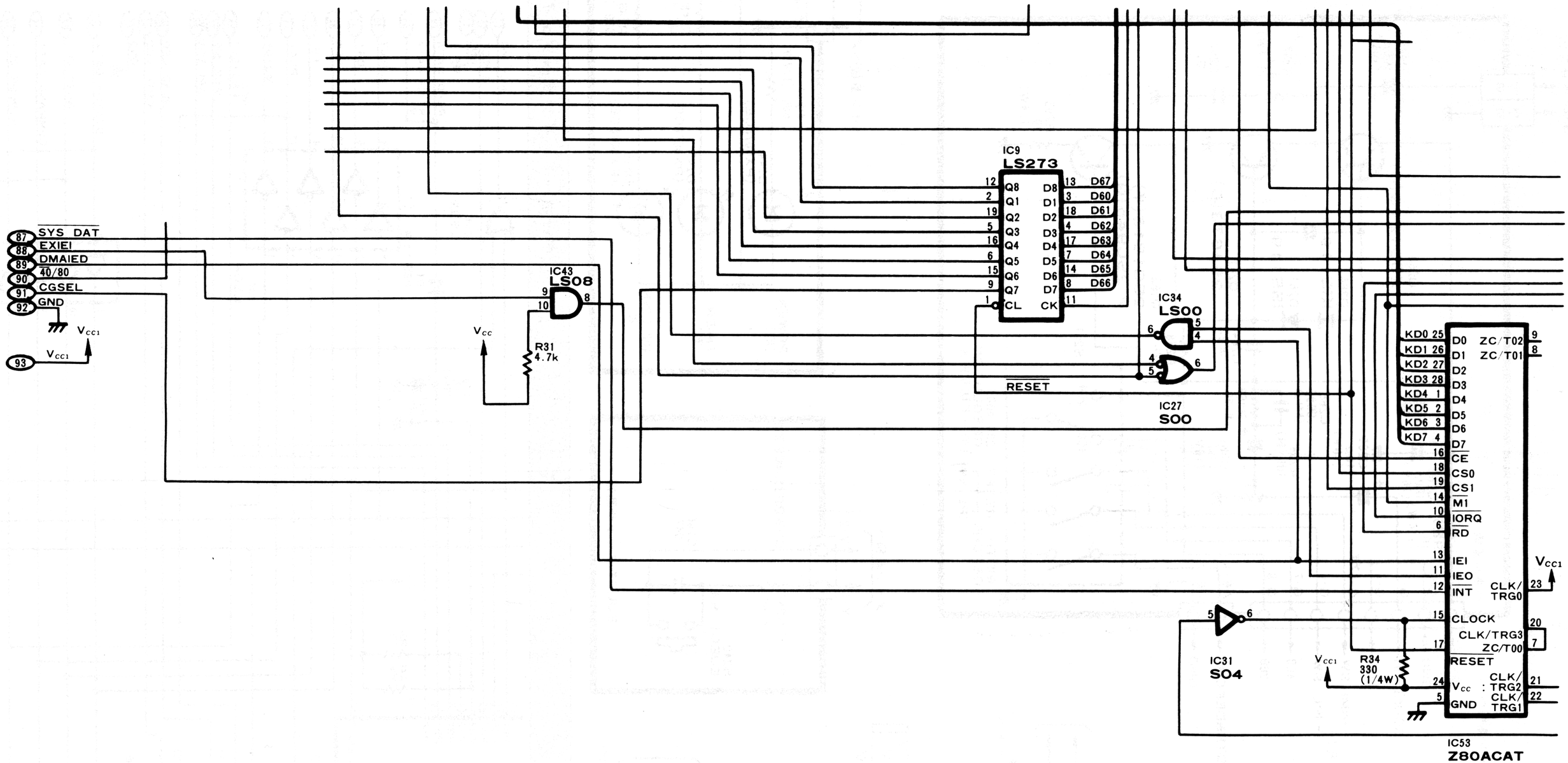
SYS DAT
EXIEI
DMAIED
40/80
CGSEL
GND
Vcc1
IC43
LS08
Vcc
R31
4.7k
IC9
LS273
Q8
Q1
Q2
Q3
Q4
Q5
Q6
Q7
CL
D8
D1
D2
D3
D4
D5
D6
D7
CK
D67
D60
D61
D62
D63
D64
D65
D66
IC34
LS00
RESET
IC27
S00
KD0
KD1
KD2
KD3
KD4
KD5
KD6
KD7
D0
D1
D2
D3
D4
D5
D6
D7
CE
CS0
CS1
M1
IORQ
RD
IEI
IEO
INT
CLOCK
RESET
Vcc
GND
ZC/T02
ZC/T01
CLK/TRG0
CLK/TRG3
ZC/T00
CLK/TRG2
CLK/TRG1
IC31
S04
R34
330
(1/4W)
IC53
Z80ACAT