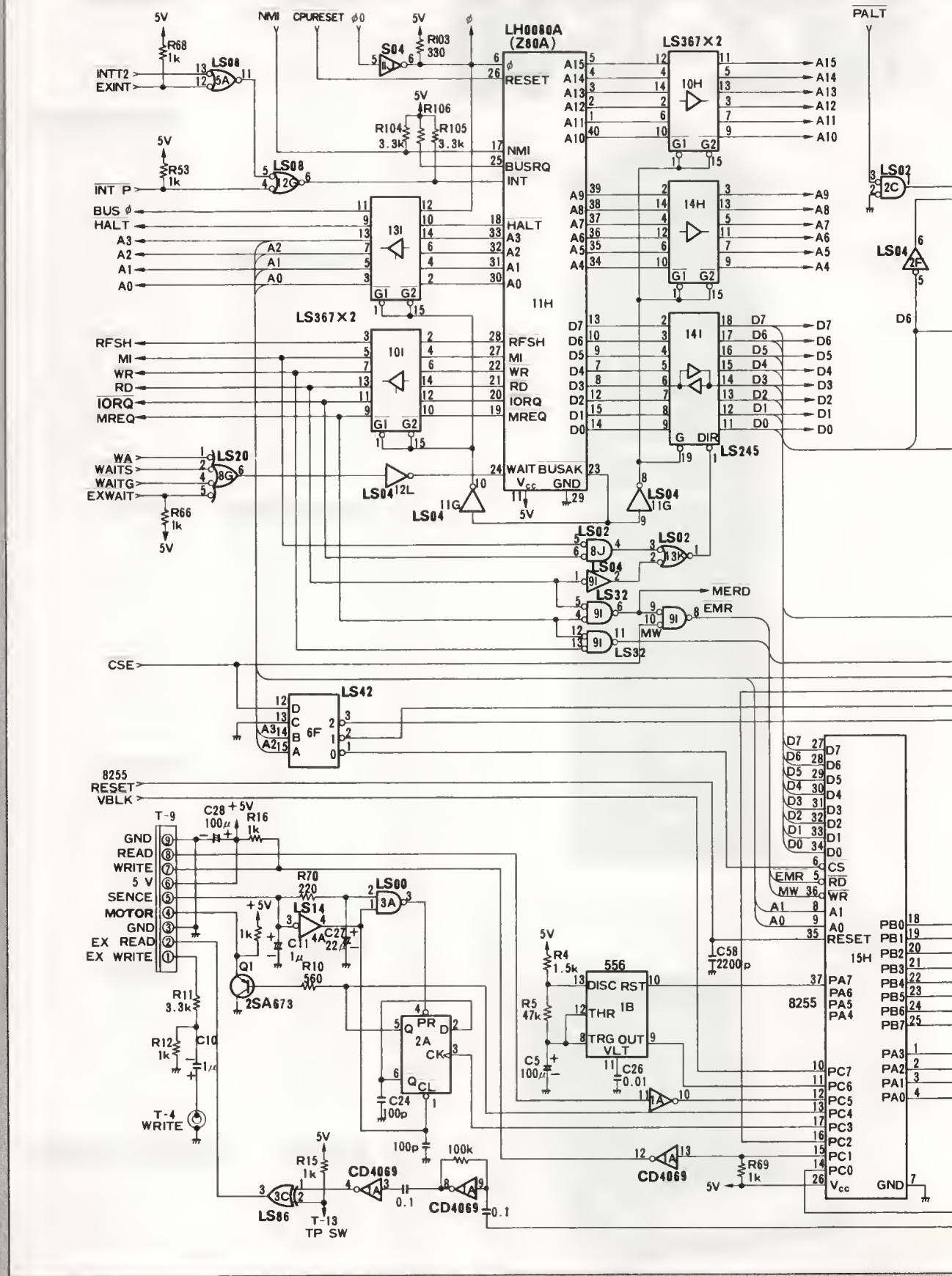
LH0080A
(Z80A)
LS367×2
LS08
LS04
LS02
LS20
LS32
LS42
LS245
LS00
LS14
LS86
556
CD4069
8255
T-9
T-4
T-13
TP SW
INTT2
EXINT
INT P
BUS Ø
HALT
RFSH
MI
WR
RD
IORQ
MREQ
WA
WAITS
WAITG
EXWAIT
CSE
8255
RESET
VBLK
GND
READ
WRITE
5 V
SENCE
MOTOR
EX READ
EX WRITE
MERD
EMR
MW
PALT
2SA673

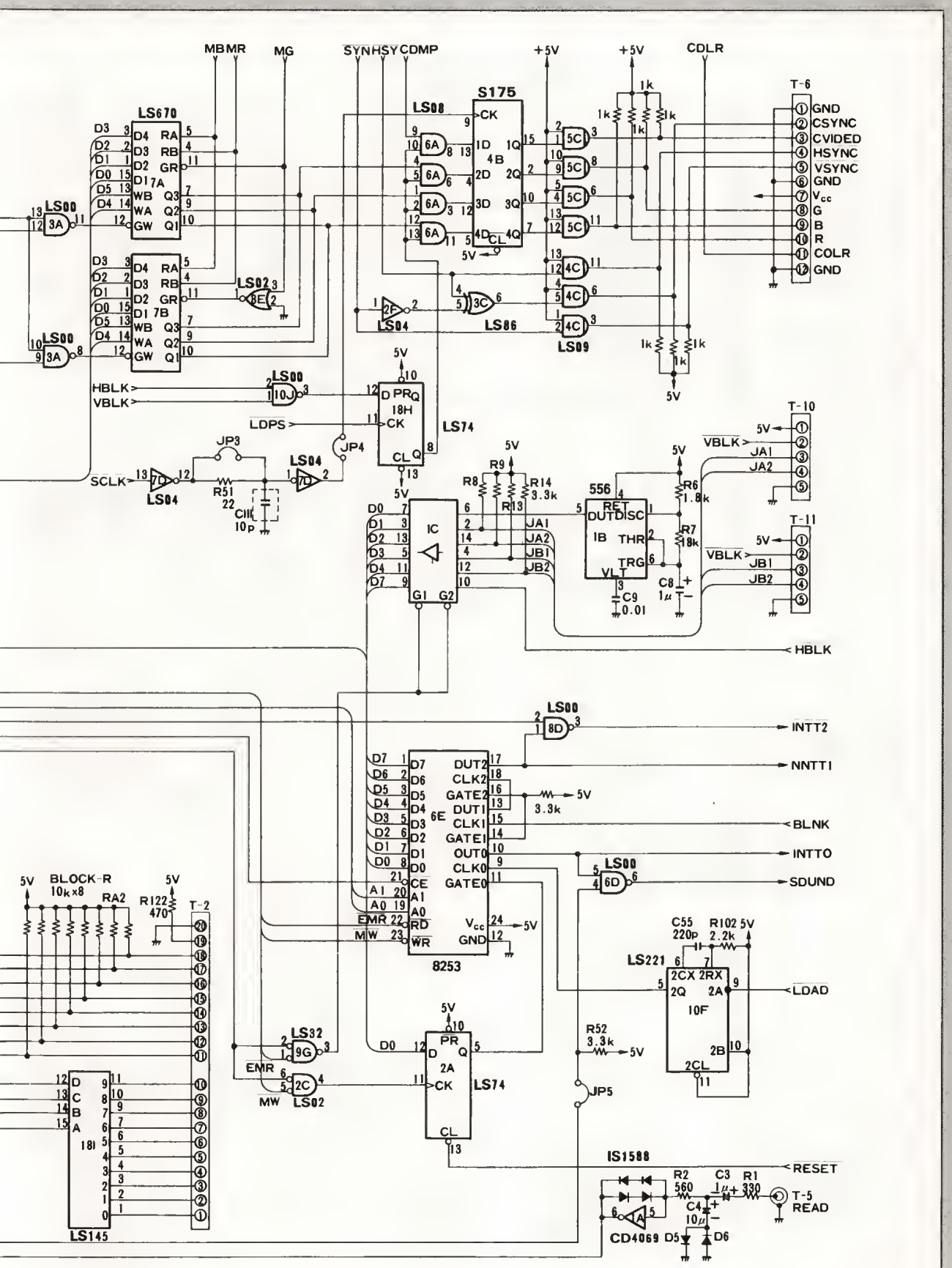
MB MR
MG
SYN HSY CDMP
+5V
+5V
CDLR
T-6
GND
CSYNC
CVIDED
HSYNC
VSYNC
GND
Vcc
G
B
R
COLR
GND
LS670
LS00
LS02
LS04
LS08
S175
LS09
LS86
LS74
HBLK
VBLK
LDPS
SCLK
JP3
JP4
R51 22
CIII 10p
IC
556
T-10
T-11
JA1
JA2
JB1
JB2
HBLK
INTT2
NNTTI
BLNK
INTTO
SDUND
8253
BLOCK-R 10k×8
RA2
R122 470
T-2
LS32
EMR
MW
LS221
C55 220p
R102 2.2k
LDAD
R52 3.3k
JP5
IS1588
RESET
R2 560
C3 1μ
R1 330
T-5 READ
C4 10μ
CD4069
D5
D6
LS145
181

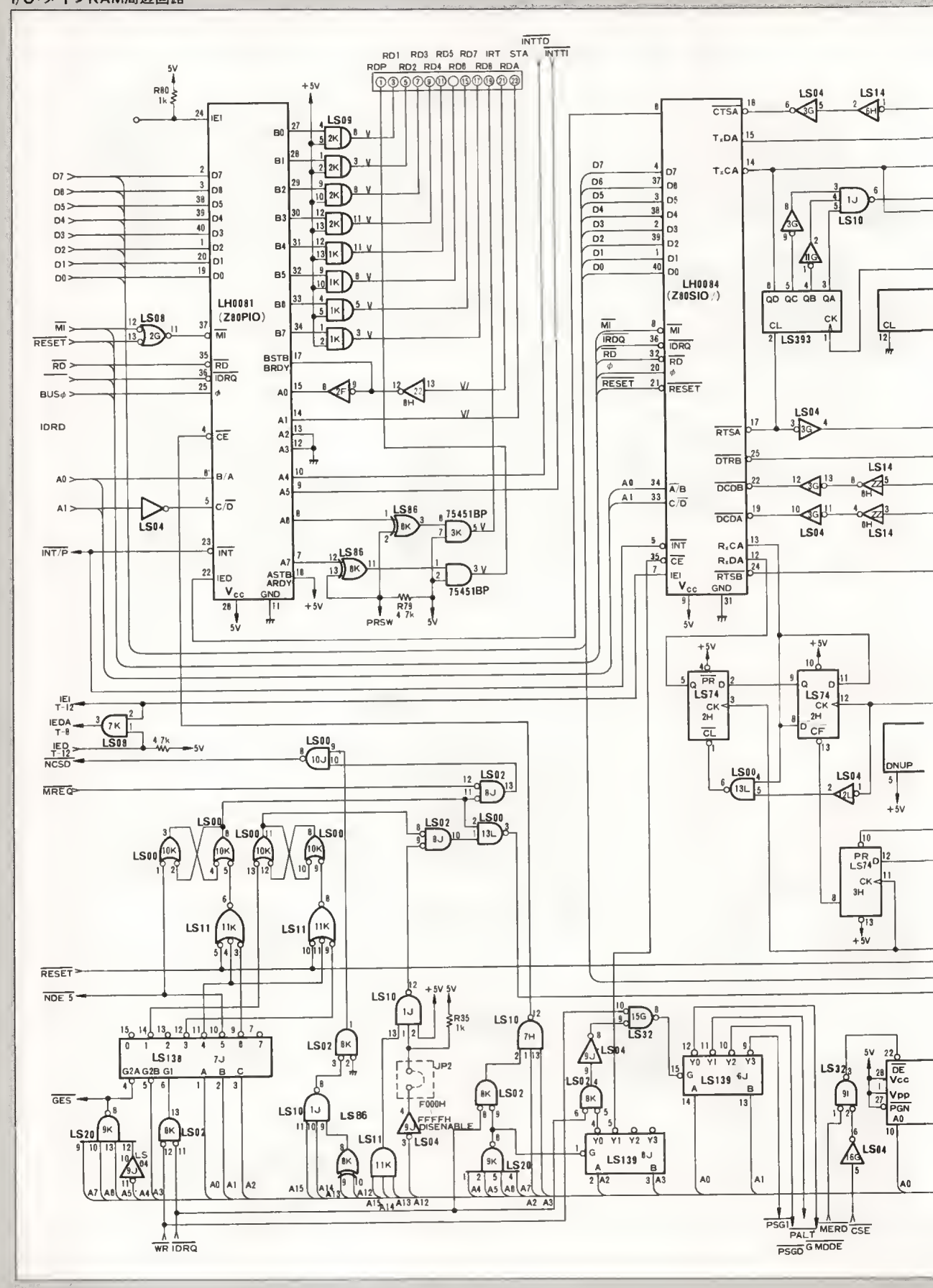
LH0081
(Z80PIO)
LH0084
(Z80SIO/)
LS09
LS08
LS04
LS14
LS10
LS393
LS86
75451BP
LS74
LS00
LS02
LS11
LS138
LS139
LS20
LS32
INTTD
INTTI
RD1 RD3 RD5 RD7 IRT STA
RDP RD2 RD4 RD6 RD8 RDA
RESET
MI
RD
BUSφ
IDRD
INT/P
IEI
IEDA
IED
NCSO
MREQ
NDE 5
GES
WR IDRQ
PSGI
PALT
MERD
CSE
PSGO
G MODE
DNUP
PRSW
UP2
F000H
FFFFH DISENABLE

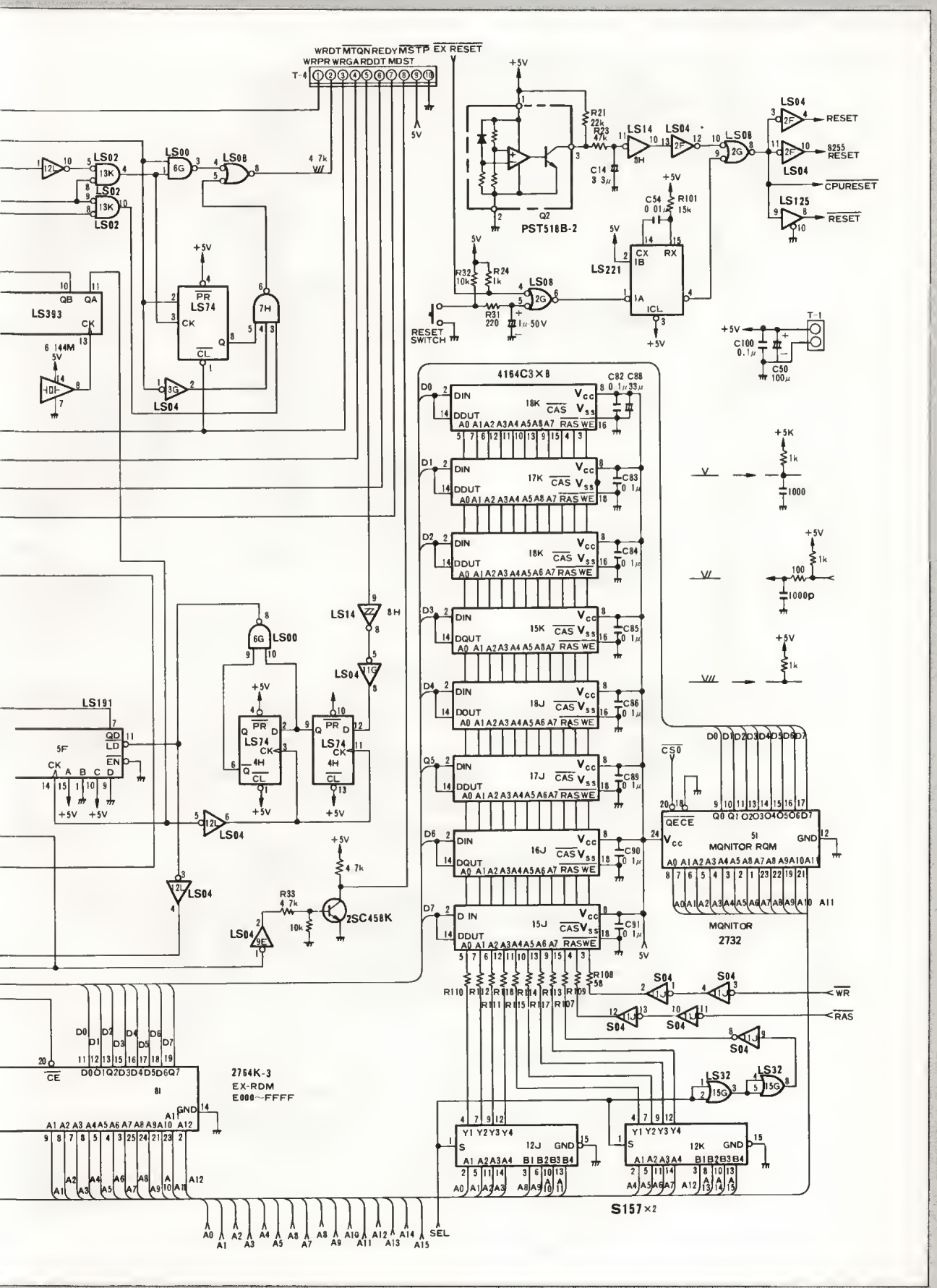
WRDT MTQN REDY MSTP EX RESET
WRPR WRGA RDDT MDST
T-4
5V
LS02
LS00
LS08
LS74
LS393
LS04
LS14
LS191
LS221
LS125
LS32
PST518B-2
Q2
R21 22k
R23 47k
C14 3.3μ
C54 0.01μ
R101 15k
R32 10k
R24 1k
R31 220
1μ 50V
RESET SWITCH
RESET
8255 RESET
CPURESET
C100 0.1μ
C50 100μ
T-1
4164C3×8
DIN
DDUT
DOUT
DQUT
RAS
CAS
WE
C82 C88
C83
C84
C85
C86
C89
C90
C91
+5K
1k
1000
100
1000p
CS0
QE CE
MONITOR RQM
MONITOR
2732
2SC458K
R33 4.7k
10k
R108 58
S04
WR
RAS
2764K-3
EX-RDM
E000~FFFF
S157×2
SEL

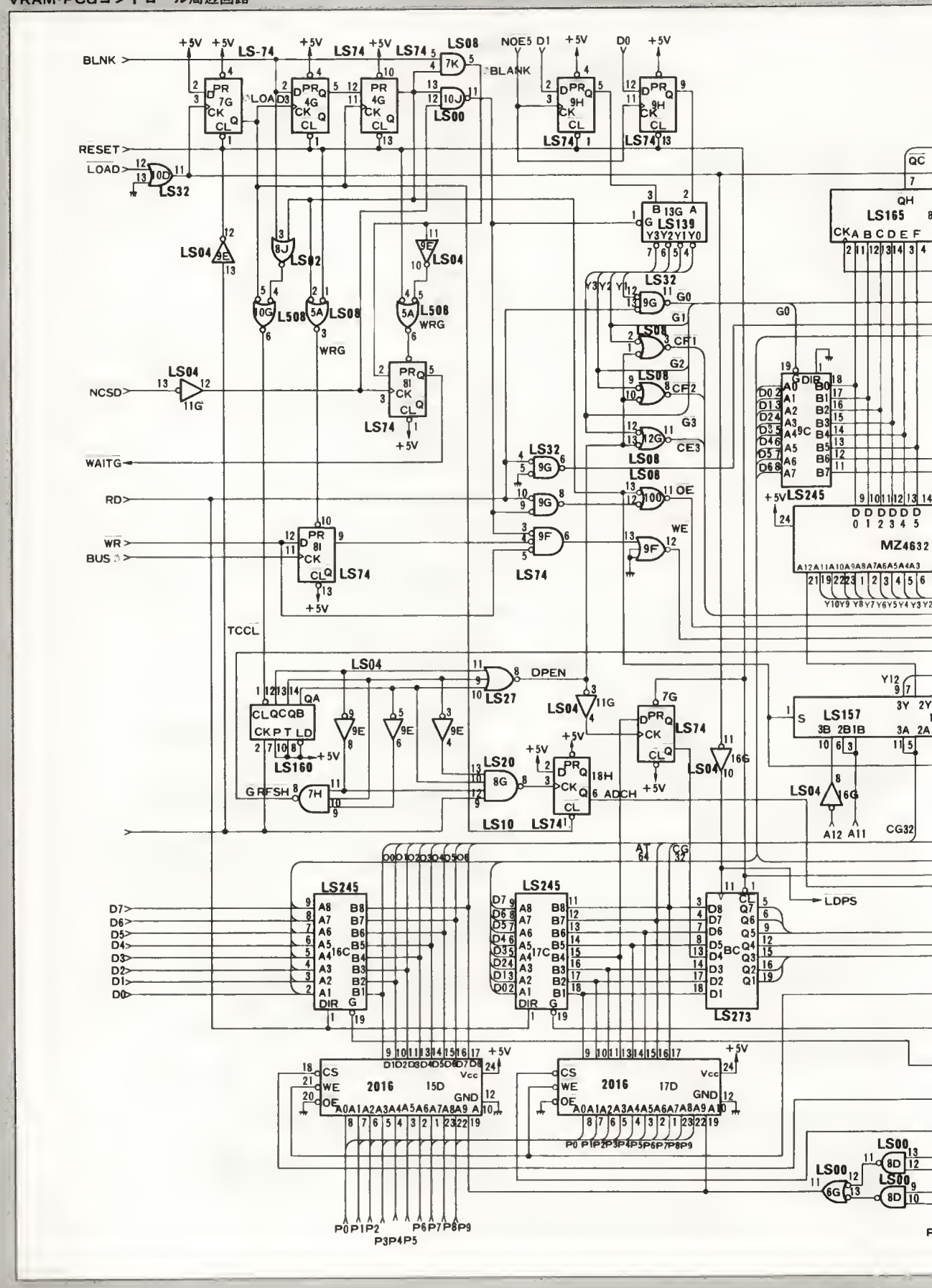
BLNK
RESET
LOAD
NCSD
WAITG
RD
WR
BUS
TCCL
LS-74
LS74
LS08
LS00
LS32
LS04
LS02
LS139
LS165
LS245
MZ4632
LS157
LS160
LS27
LS20
LS10
LS273
2016
BLANK
DPEN
ADCH
LDPS
WRG
CF1
CF2
CE3
OE
WE
GRFSH
D7
D6
D5
D4
D3
D2
D1
D0
P0 P1 P2
P3 P4 P5
P6 P7 P8 P9

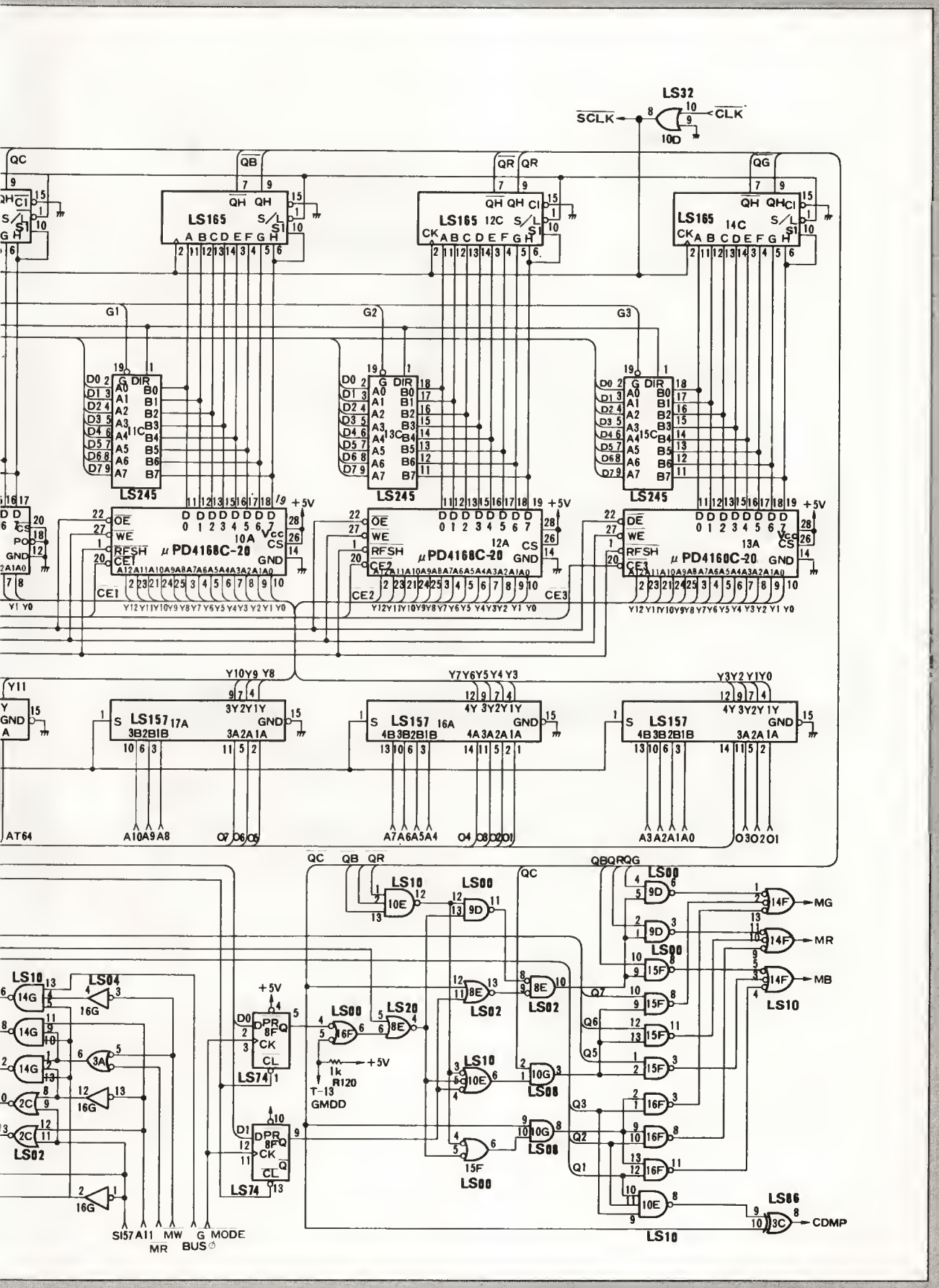
LS32
SCLK
CLK
10D
LS165
LS245
μPD4168C-20
LS157
LS74
LS00
LS02
LS04
LS08
LS10
LS20
LS86
MG
MR
MB
CDMP
T-13
GMDD
R120
1k
+5V
MODE
BUS
MW
A11
SI57
AT64

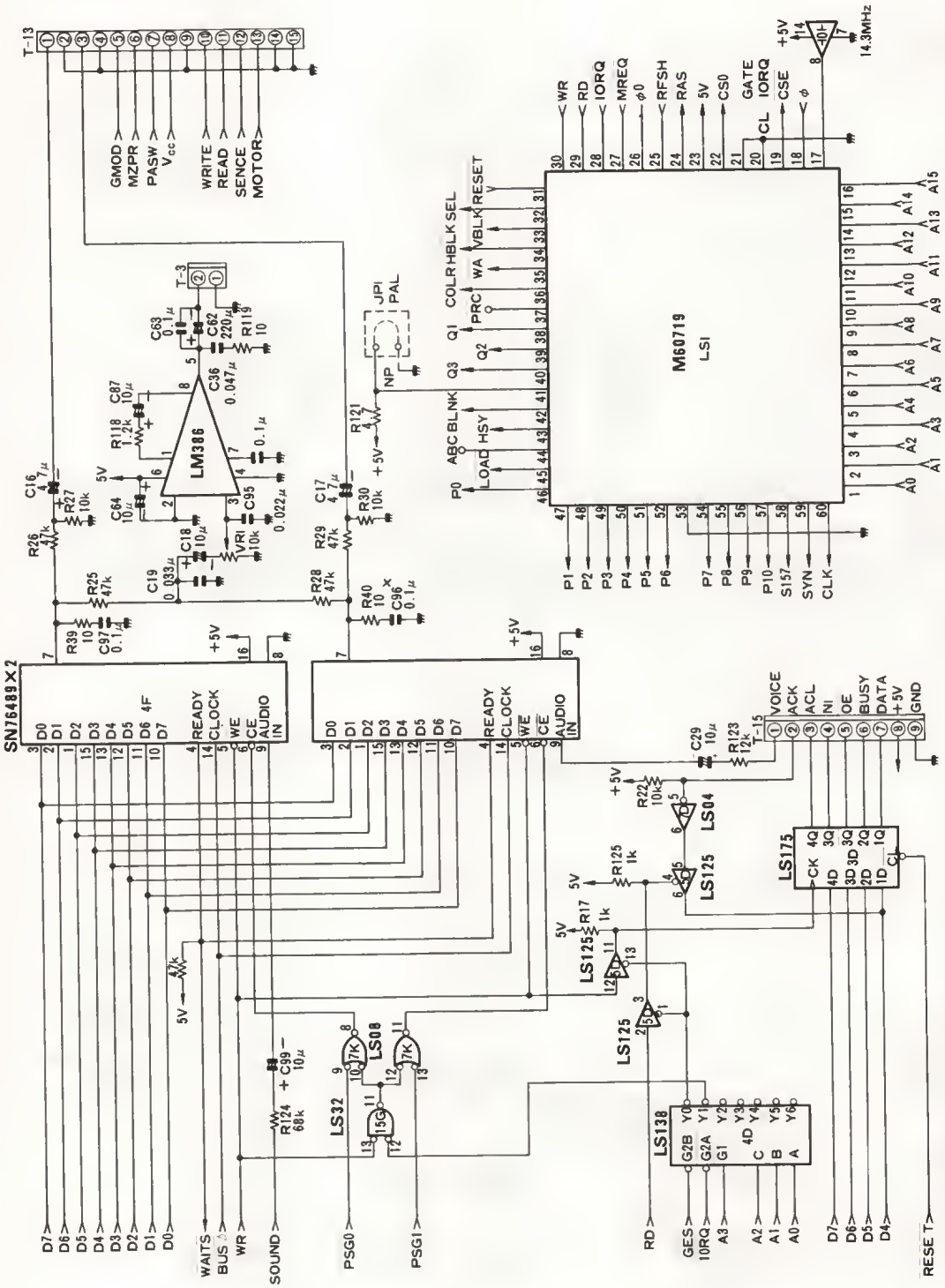
T-13
GMOD
MZPR
PASW
Vcc
WRITE
READ
SENCE
MOTOR
T-3
LM386
M60719
LSI
SN76489×2
LS04
LS125
LS175
LS138
LS32
LS08
T-15
VOICE
ACK
ACL
NI
OE
BUSY
DATA
+5V
GND
14.3MHz
WR
RD
IORQ
MREQ
RFSH
RAS
CS0
GATE
CSE
RESET
COLR
HBLK
SEL
VBLK
WA
PRC
Q1
Q2
Q3
BLNK
HSY
LOAD
ABC
P0
P1
P2
P3
P4
P5
P6
P7
P8
P9
P10
S157
SYN
CLK
A0
A1
A2
A3
A4
A5
A6
A7
A8
A9
A10
A11
A12
A13
A14
A15
JP1
PAL
NP
READY
CLOCK
WE
CE
AUDIO IN
D0
D1
D2
D3
D4
D5
D6
D7
WAITS
BUS
SOUND
PSG0
PSG1
GES
IORQ
RESET

RAMファイル回路

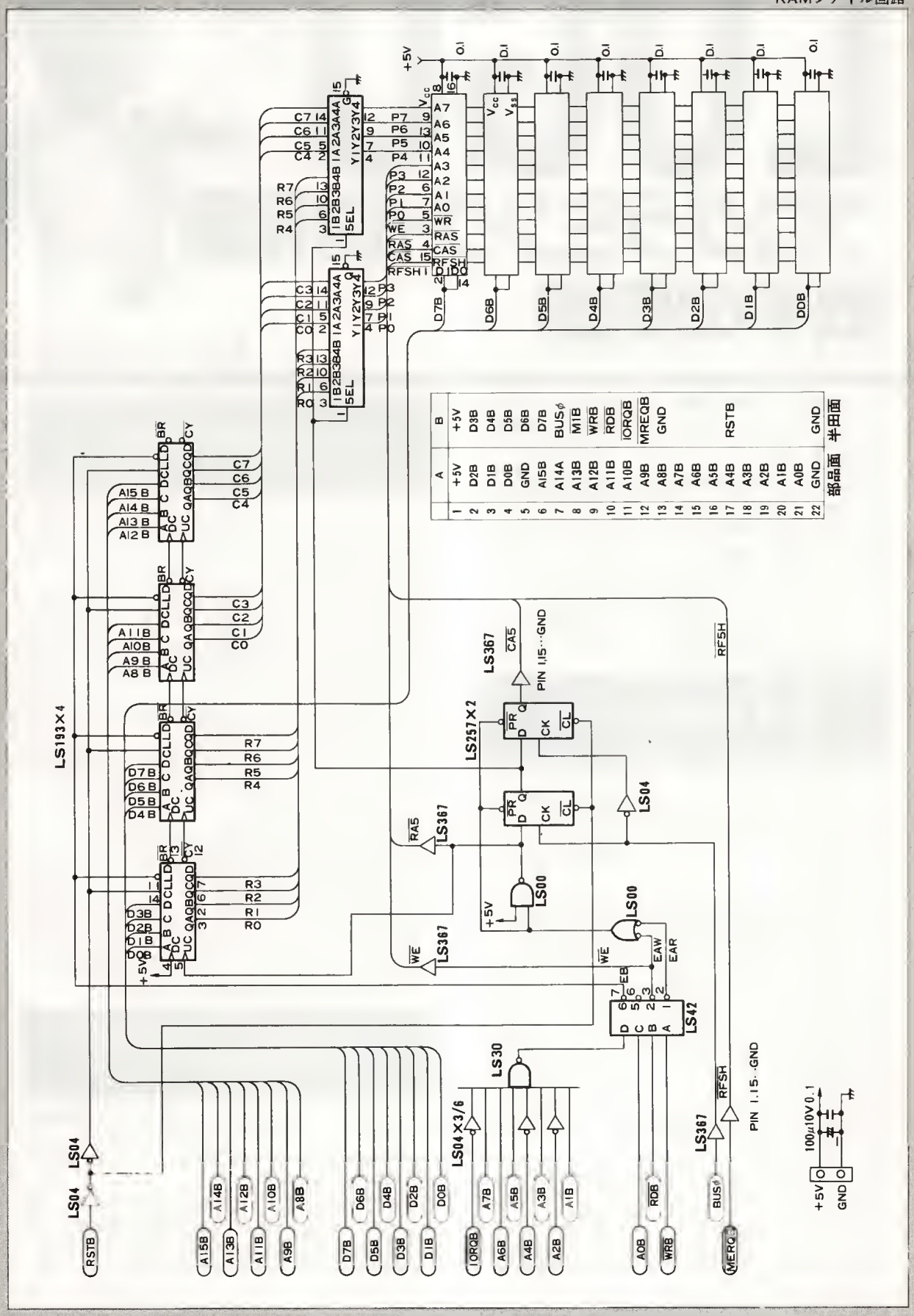
LS193×4
LS257×2
LS367
LS04
LS00
LS42
LS30
LS04×3/6
PIN 1,15…GND
部品面 半田面
100μ10V 0.1
+5V
GND